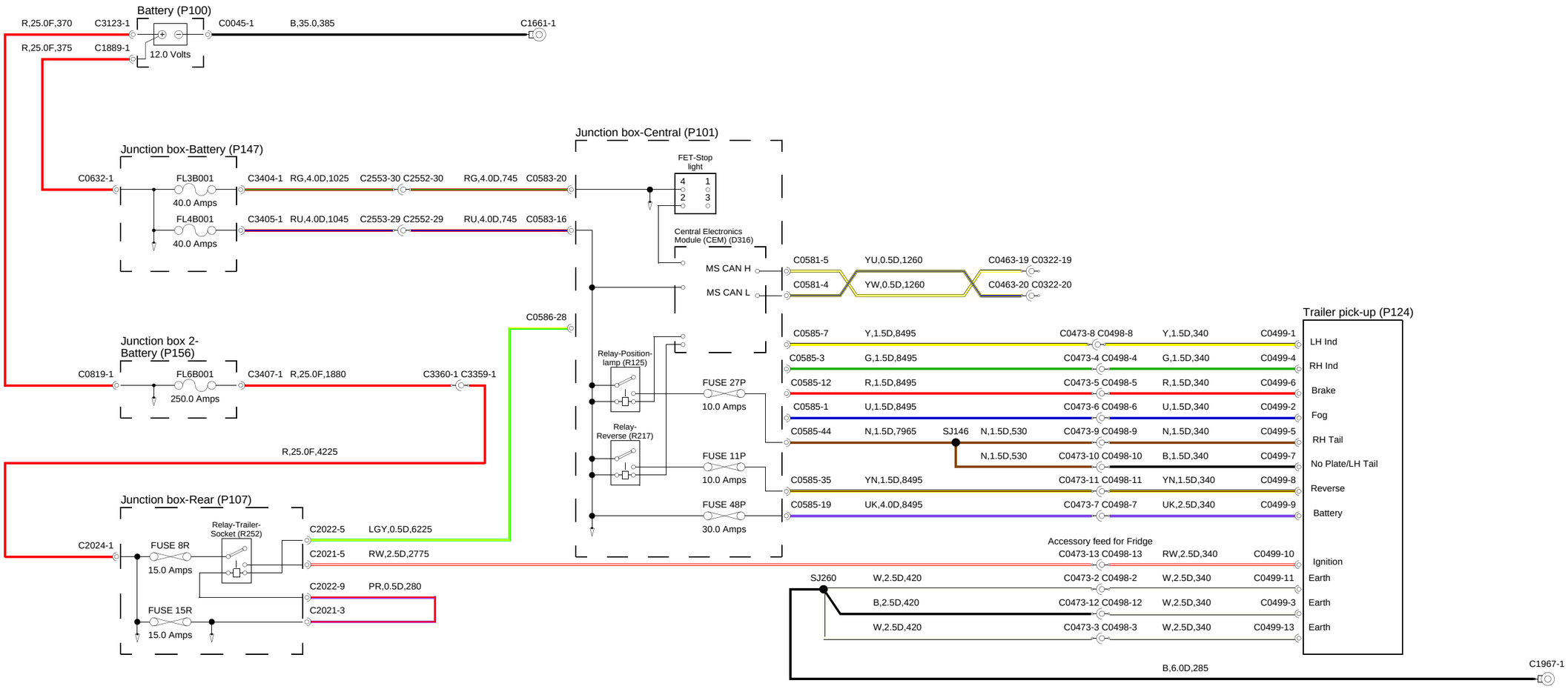
Battery (P100)
R,25.0F,370
C3123-1
C0045-1
B,35.0,385
C1661-1
R,25.0F,375
C1889-1
12.0 Volts
Junction box-Battery (P147)
C0632-1
FL3B001
40.0 Amps
C3404-1
RG,4.0D,1025
C2553-30
C2552-30
RG,4.0D,745
C0583-20
FL4B001
40.0 Amps
C3405-1
RU,4.0D,1045
C2553-29
C2552-29
RU,4.0D,745
C0583-16
Junction box-Central (P101)
FET-Stop light
Central Electronics Module (CEM) (D316)
MS CAN H
MS CAN L
C0581-5
YU,0.5D,1260
C0463-19
C0322-19
C0581-4
YW,0.5D,1260
C0463-20
C0322-20
C0586-28
Junction box 2-Battery (P156)
C0819-1
FL6B001
250.0 Amps
C3407-1
R,25.0F,1880
C3360-1
C3359-1
R,25.0F,4225
Relay-Position-lamp (R125)
Relay-Reverse (R217)
FUSE 27P
10.0 Amps
FUSE 11P
10.0 Amps
FUSE 48P
30.0 Amps
Junction box-Rear (P107)
C2024-1
FUSE 8R
15.0 Amps
Relay-Trailer-Socket (R252)
FUSE 15R
15.0 Amps
C2022-5
LGY,0.5D,6225
C2021-5
RW,2.5D,2775
C2022-9
PR,0.5D,280
C2021-3
Trailer pick-up (P124)
C0585-7
Y,1.5D,8495
C0473-8
C0498-8
Y,1.5D,340
C0499-1
LH Ind
C0585-3
G,1.5D,8495
C0473-4
C0498-4
G,1.5D,340
C0499-4
RH Ind
C0585-12
R,1.5D,8495
C0473-5
C0498-5
R,1.5D,340
C0499-6
Brake
C0585-1
U,1.5D,8495
C0473-6
C0498-6
U,1.5D,340
C0499-2
Fog
C0585-44
N,1.5D,7965
SJ146
N,1.5D,530
C0473-9
C0498-9
N,1.5D,340
C0499-5
RH Tail
N,1.5D,530
C0473-10
C0498-10
B,1.5D,340
C0499-7
No Plate/LH Tail
C0585-35
YN,1.5D,8495
C0473-11
C0498-11
YN,1.5D,340
C0499-8
Reverse
C0585-19
UK,4.0D,8495
C0473-7
C0498-7
UK,2.5D,340
C0499-9
Battery
Accessory feed for Fridge
C0473-13
C0498-13
RW,2.5D,340
C0499-10
Ignition
SJ260
W,2.5D,420
C0473-2
C0498-2
W,2.5D,340
C0499-11
Earth
B,2.5D,420
C0473-12
C0498-12
W,2.5D,340
C0499-3
Earth
W,2.5D,420
C0473-3
C0498-3
W,2.5D,340
C0499-13
Earth
B,6.0D,285
C1967-1