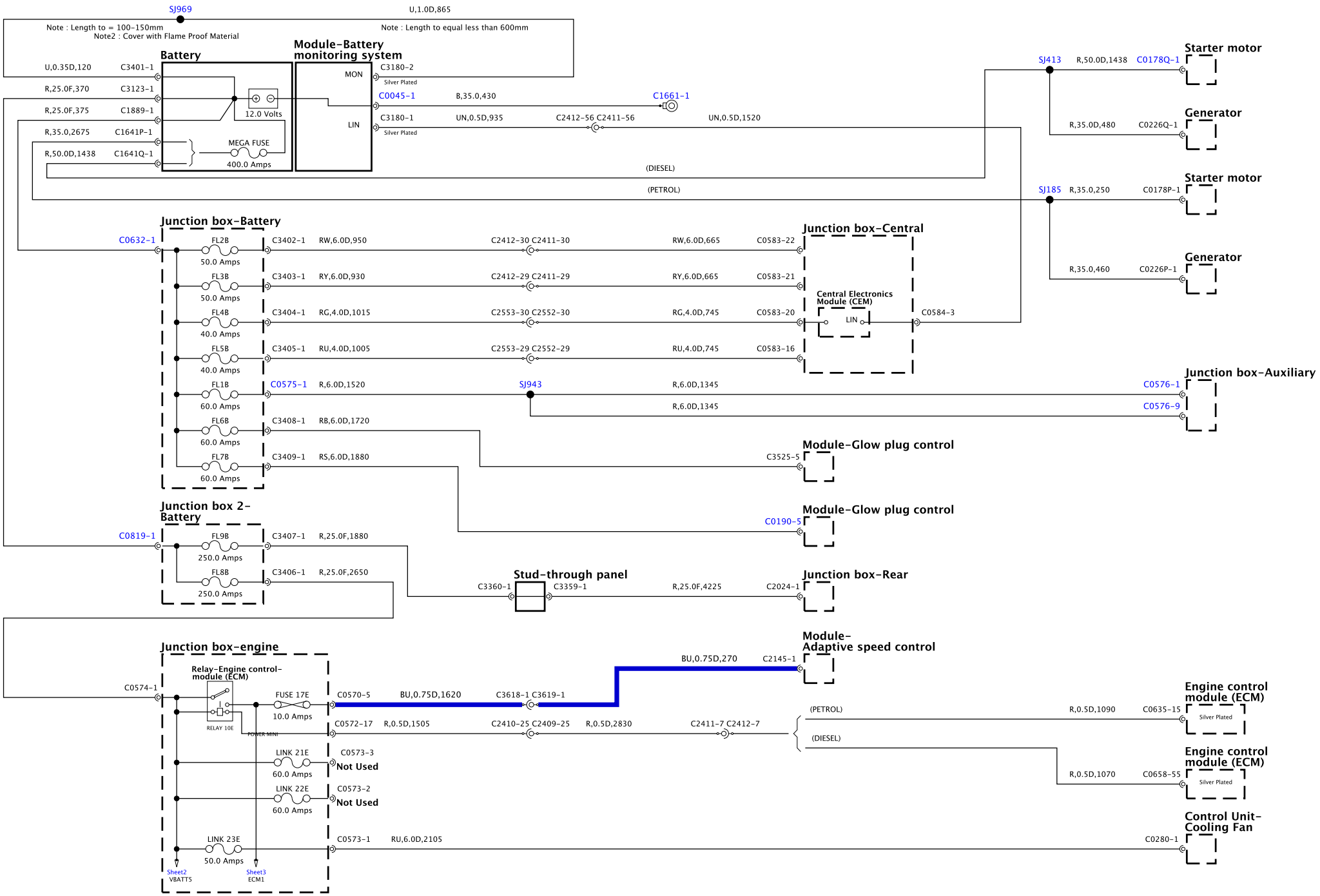
SJ969
U,1.0D,865
Note : Length to = 100-150mm
Note2 : Cover with Flame Proof Material
Note : Length to equal less than 600mm
Battery
Module-Battery monitoring system
U,0.35D,120 C3401-1
R,25.0F,370 C3123-1
R,25.0F,375 C1889-1
R,35.0,2675 C1641P-1
R,50.0D,1438 C1641Q-1
12.0 Volts
MEGA FUSE
400.0 Amps
MON
LIN
C3180-2
Silver Plated
C0045-1
B,35.0,430
C1661-1
C3180-1
UN,0.5D,935
C2412-56 C2411-56
UN,0.5D,1520
(DIESEL)
(PETROL)
SJ413
R,50.0D,1438
C0178Q-1
Starter motor
R,35.0D,480
C0226Q-1
Generator
SJ185
R,35.0,250
C0178P-1
Starter motor
R,35.0,460
C0226P-1
Generator
Junction box-Battery
C0632-1
FL2B 50.0 Amps
C3402-1 RW,6.0D,950
C2412-30 C2411-30
RW,6.0D,665
C0583-22
FL3B 50.0 Amps
C3403-1 RY,6.0D,930
C2412-29 C2411-29
RY,6.0D,665
C0583-21
FL4B 40.0 Amps
C3404-1 RG,4.0D,1015
C2553-30 C2552-30
RG,4.0D,745
C0583-20
FL5B 40.0 Amps
C3405-1 RU,4.0D,1005
C2553-29 C2552-29
RU,4.0D,745
C0583-16
FL1B 60.0 Amps
C0575-1 R,6.0D,1520
SJ943
R,6.0D,1345
C0576-1
R,6.0D,1345
C0576-9
FL6B 60.0 Amps
C3408-1 RB,6.0D,1720
FL7B 60.0 Amps
C3409-1 RS,6.0D,1880
Junction box-Central
Central Electronics Module (CEM)
LIN
C0584-3
Junction box-Auxiliary
C3525-5
Module-Glow plug control
C0190-5
Module-Glow plug control
Junction box 2-Battery
C0819-1
FL9B 250.0 Amps
C3407-1 R,25.0F,1880
FL8B 250.0 Amps
C3406-1 R,25.0F,2650
Stud-through panel
C3360-1
C3359-1
R,25.0F,4225
C2024-1
Junction box-Rear
Junction box-engine
Relay-Engine control-module (ECM)
C0574-1
RELAY 10E
POWER MINI
FUSE 17E 10.0 Amps
C0570-5
BU,0.75D,1620
C3618-1 C3619-1
BU,0.75D,270
C2145-1
Module-Adaptive speed control
C0572-17
R,0.5D,1505
C2410-25 C2409-25
R,0.5D,2830
C2411-7 C2412-7
(PETROL)
(DIESEL)
R,0.5D,1090
C0635-15
Silver Plated
Engine control module (ECM)
R,0.5D,1070
C0658-55
Silver Plated
Engine control module (ECM)
LINK 21E 60.0 Amps
C0573-3
Not Used
LINK 22E 60.0 Amps
C0573-2
Not Used
LINK 23E 50.0 Amps
C0573-1
RU,6.0D,2105
C0280-1
Control Unit-Cooling Fan
Sheet2 VBATT5
Sheet3 ECM1

BH42-70010-F-A-02-05-Service (L322-11MY-J081)

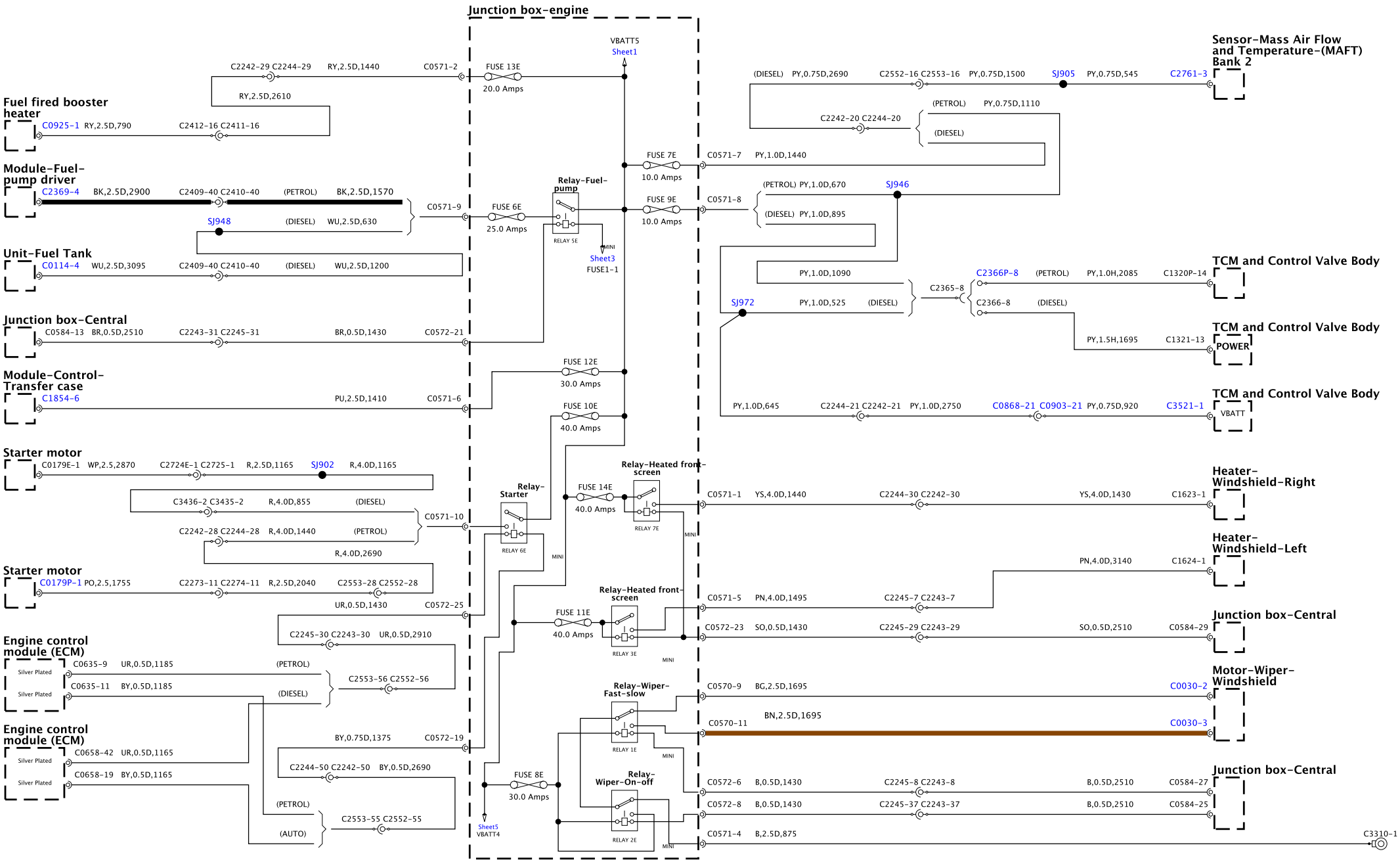

BH42-70010-F-A-03-05-Service (L322-11MY-JO81)

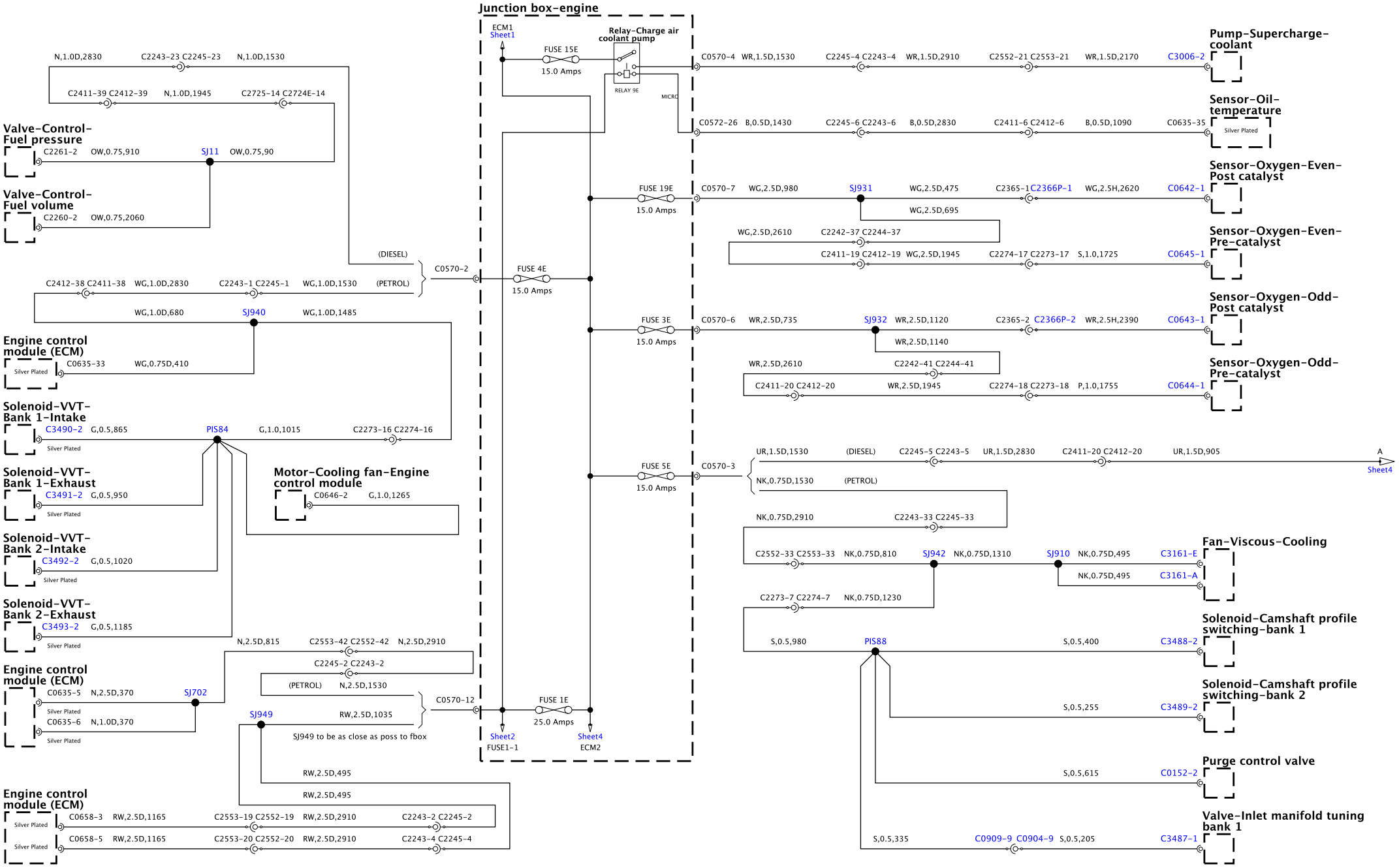

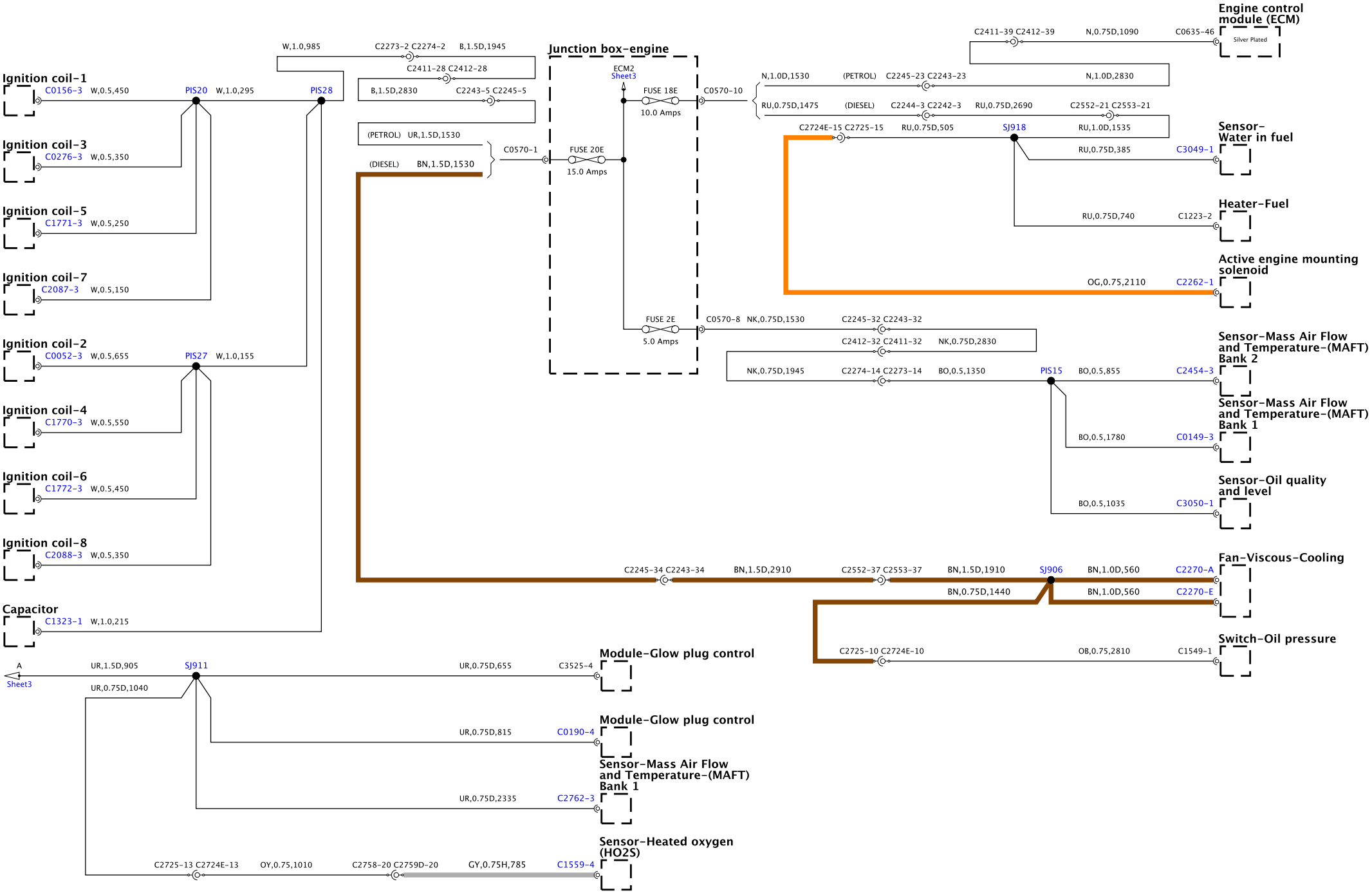
Ignition coil-1
C0156-3 W,0.5,450
PIS20 W,1.0,295
PIS28
Ignition coil-3
C0276-3 W,0.5,350
Ignition coil-5
C1771-3 W,0.5,250
Ignition coil-7
C2087-3 W,0.5,150
Ignition coil-2
C0052-3 W,0.5,655
PIS27 W,1.0,155
Ignition coil-4
C1770-3 W,0.5,550
Ignition coil-6
C1772-3 W,0.5,450
Ignition coil-8
C2088-3 W,0.5,350
Capacitor
C1323-1 W,1.0,215
W,1.0,985
C2273-2 C2274-2 B,1.5D,1945
C2411-28 C2412-28
B,1.5D,2830
C2243-5 C2245-5
(PETROL) UR,1.5D,1530
(DIESEL) BN,1.5D,1530
C0570-1
Junction box-engine
ECM2
Sheet3
FUSE 18E
10.0 Amps
FUSE 20E
15.0 Amps
FUSE 2E
5.0 Amps
C0570-10
N,1.0D,1530 (PETROL) C2245-23 C2243-23 N,1.0D,2830
RU,0.75D,1475 (DIESEL) C2244-3 C2242-3 RU,0.75D,2690 C2552-21 C2553-21
C2724E-15 C2725-15 RU,0.75D,505
SJ918
RU,1.0D,1535
RU,0.75D,385
C3049-1
RU,0.75D,740
C1223-2
OG,0.75,2110
C2262-1
C0570-8 NK,0.75D,1530 C2245-32 C2243-32
C2412-32 C2411-32 NK,0.75D,2830
NK,0.75D,1945 C2274-14 C2273-14 BO,0.5,1350
PIS15
BO,0.5,855
C2454-3
BO,0.5,1780
C0149-3
BO,0.5,1035
C3050-1
C2411-39 C2412-39 N,0.75D,1090 C0635-46
Silver Plated
Engine control module (ECM)
Sensor-Water in fuel
Heater-Fuel
Active engine mounting solenoid
Sensor-Mass Air Flow and Temperature-(MAFT) Bank 2
Sensor-Mass Air Flow and Temperature-(MAFT) Bank 1
Sensor-Oil quality and level
C2245-34 C2243-34 BN,1.5D,2910 C2552-37 C2553-37 BN,1.5D,1910
SJ906
BN,1.0D,560 C2270-A
BN,0.75D,1440
BN,1.0D,560 C2270-E
Fan-Viscous-Cooling
C2725-10 C2724E-10 OB,0.75,2810 C1549-1
Switch-Oil pressure
A
Sheet3
UR,1.5D,905
SJ911
UR,0.75D,655 C3525-4
Module-Glow plug control
UR,0.75D,1040
UR,0.75D,815 C0190-4
Module-Glow plug control
UR,0.75D,2335 C2762-3
Sensor-Mass Air Flow and Temperature-(MAFT) Bank 1
C2725-13 C2724E-13 OY,0.75,1010 C2758-20 C2759D-20 GY,0.75H,785 C1559-4
Sensor-Heated oxygen (HO2S)
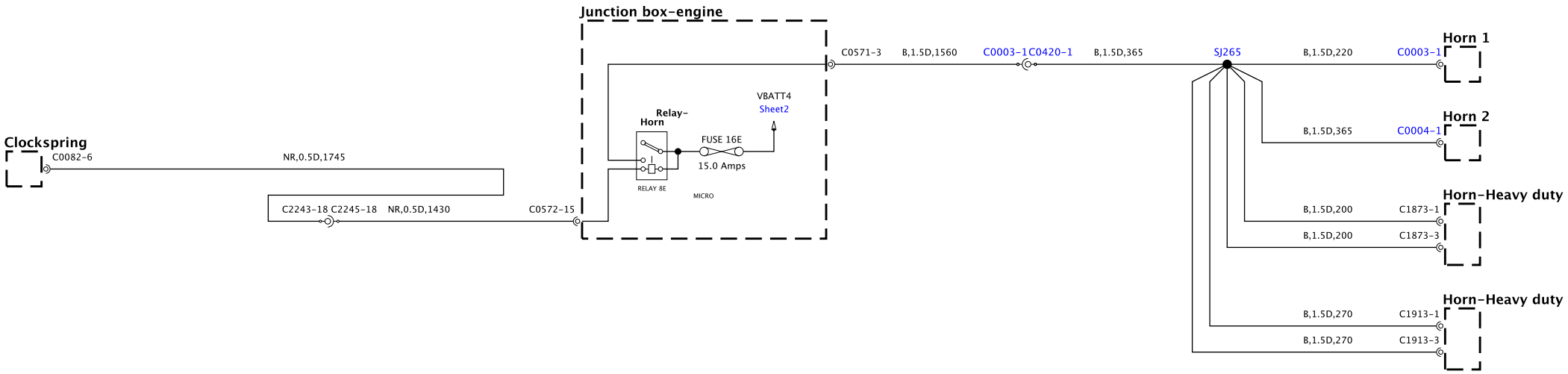
BH42-70010-F-A-05-05-Service (L322-11MY-J081)