BH42-70060-C-A-01-04-Service (L322-11MY-JOB3)

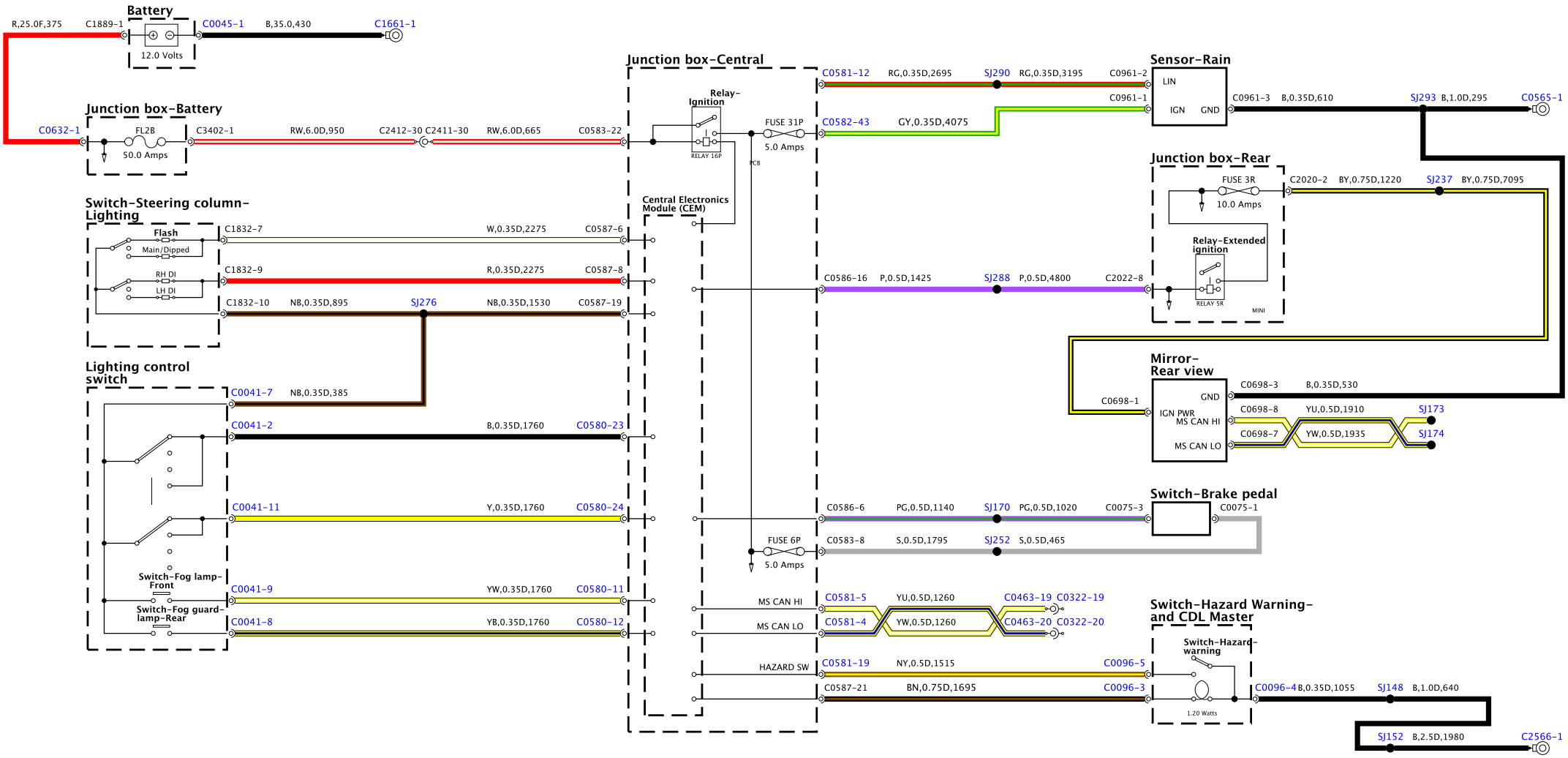

BH42-70060-C-A-02-04-Service (L322-11MY-JOB1)

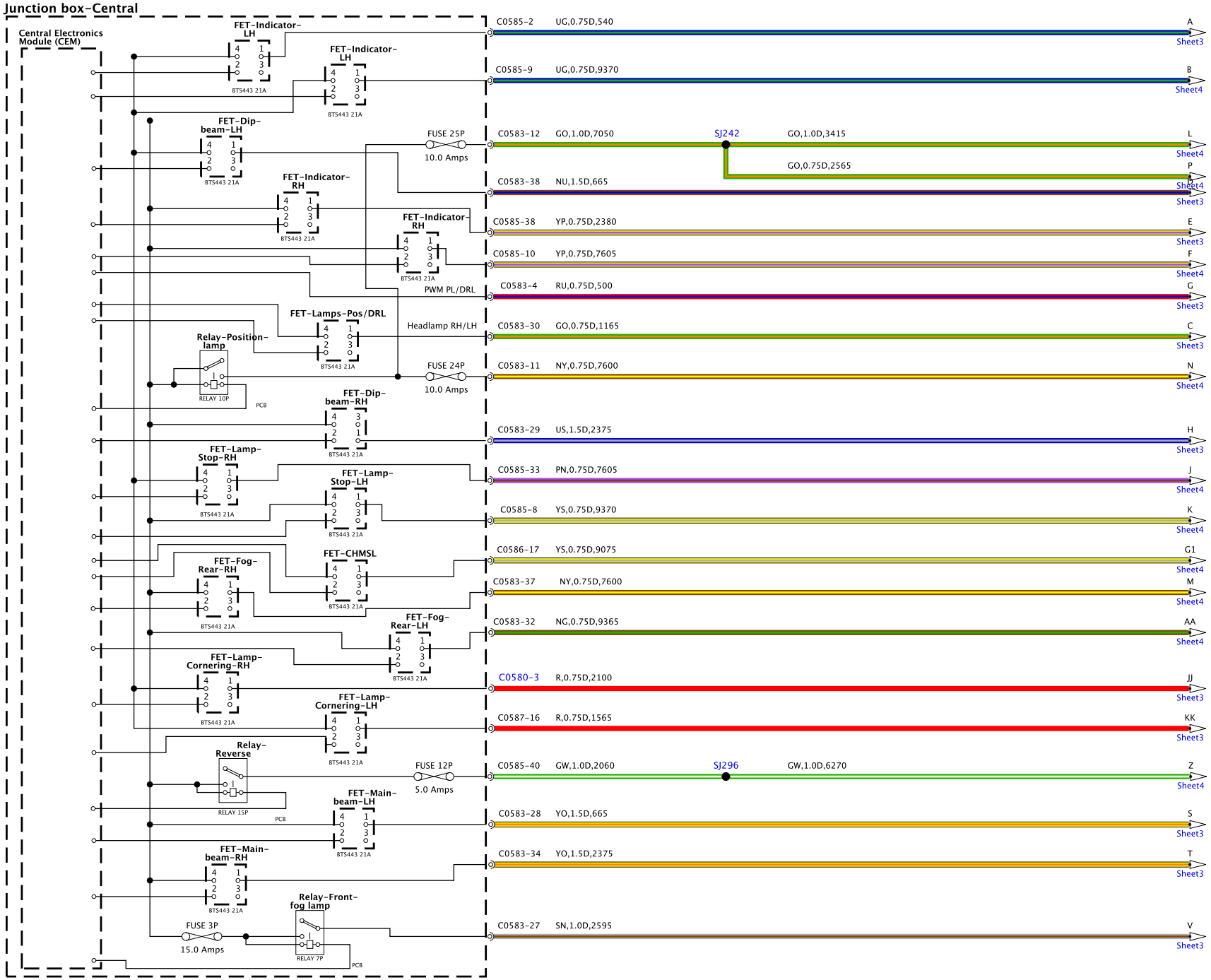

BH42-70060-C-A-03-04-Service (L322-11MY-J081)

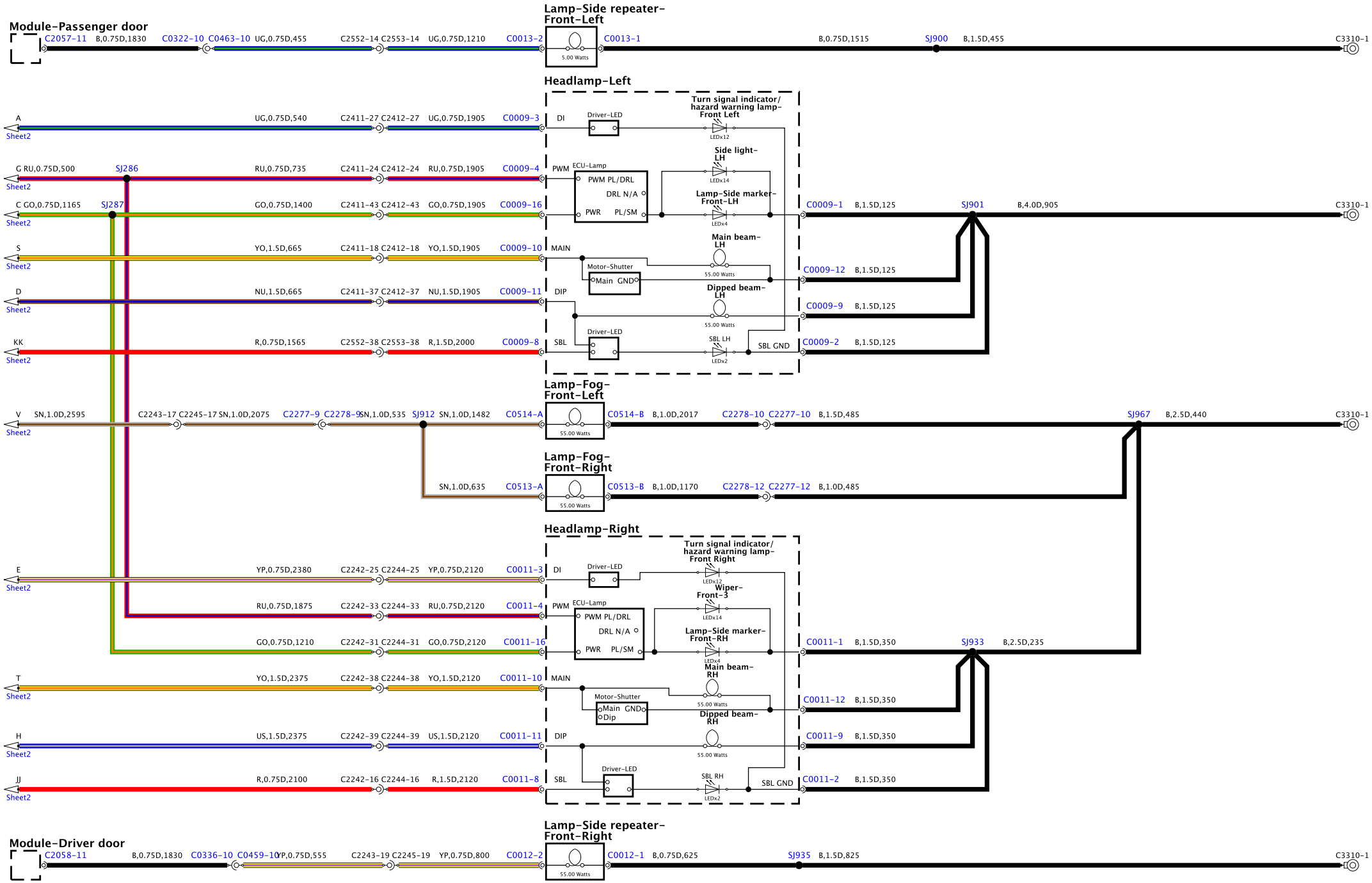
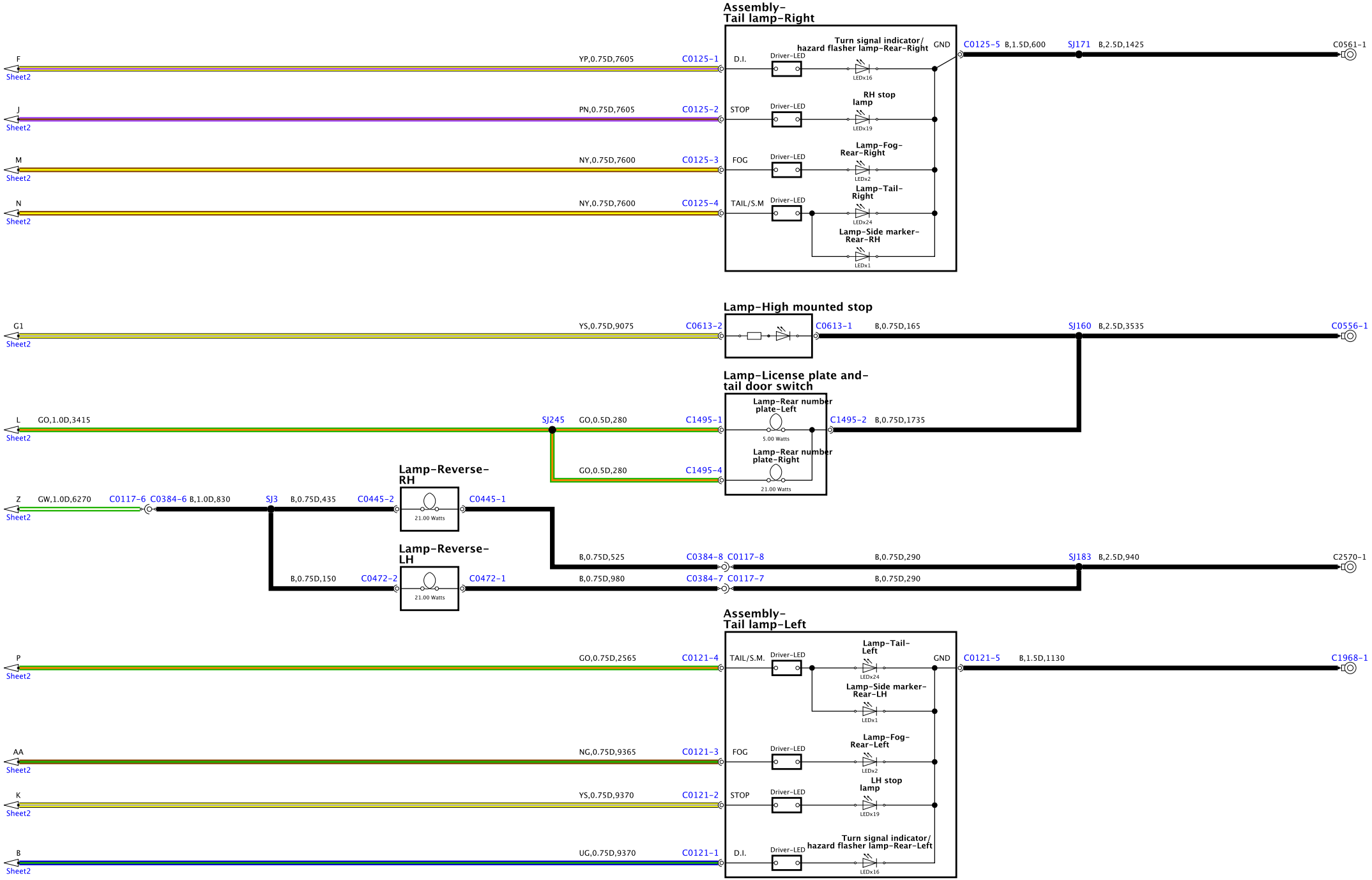
BH42-70060-C-A-04-04-Service (L322-11MY-J081)