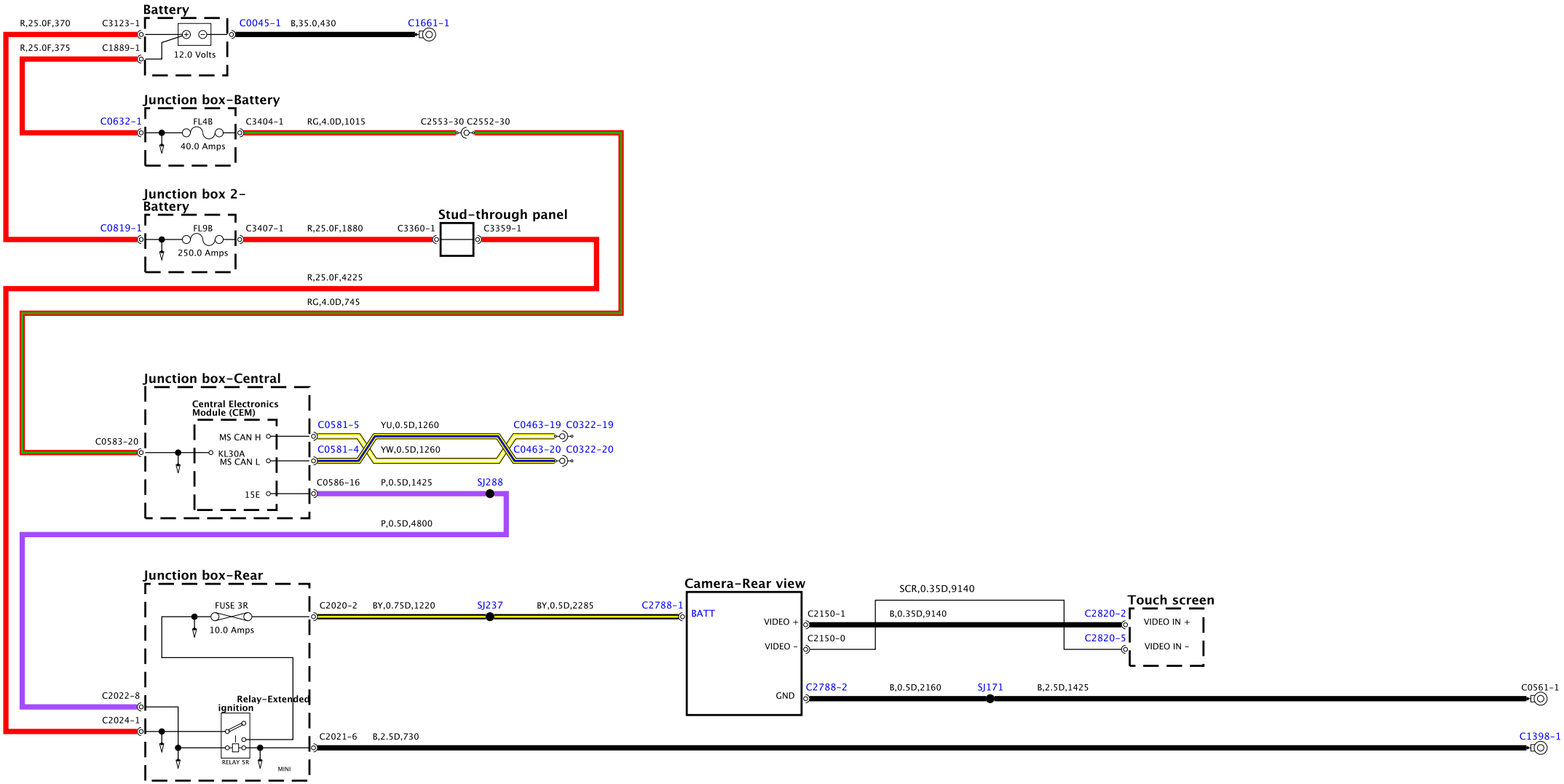BH42-70483-F-A-01-01-Service (L322-11MY-JOB1)